GAS SPRING POWERLINE WITH REINFORCED SPRING BASE

Note:
Initial spring force at 150 bar = 1500 daN

Order No for spare parts kit: 2487.12.01500

Pressure medium: Nitrogen N_2
Max. filling pressure: 150 bar
Min. filling pressure: 25 bar
Working temperature: 0°C to +80°C
Temperature related force increase: ± 0.3%/°C
Max. recommended extensions per minute:
approx. 50 to 100 (at 20°C)
Max. piston speed: 1.6 m/s

2487.12.33.01500.

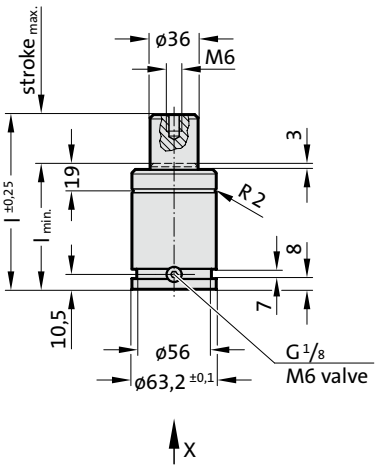

APPROVED PED 2014/68/EU

S>max | V>max | P>max | Flex Guide™

View X

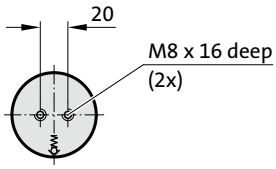

2487.12.33.01500.

Gas spring POWERLINE with reinforced spring base

Order No	Stroke$_{max.}$ (s)	$l_{min.}$	l
2487.12.33.01500.013	13	65	78
2487.12.33.01500.016	16	68	84
2487.12.33.01500.019	19	71	90
2487.12.33.01500.025	25	77	102
2487.12.33.01500.032	32	84	116
2487.12.33.01500.038	38	90	128
2487.12.33.01500.050	50	102	152
2487.12.33.01500.063	63	115	178
2487.12.33.01500.075	75	127	202
2487.12.33.01500.080	80	132	212
2487.12.33.01500.100	100	152	252
2487.12.33.01500.125	125	177	302

Initial spring force
versus charge pressure

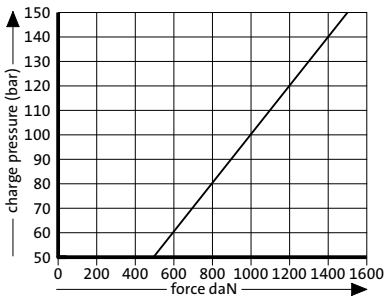

Spring force Diagram displacement versus stroke rise

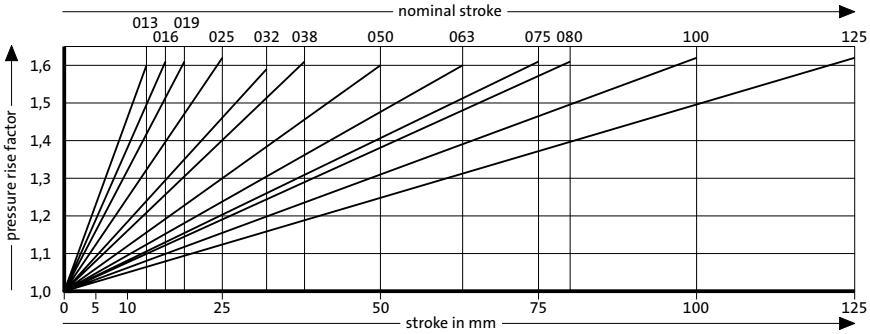

Pressure rise factor accounts for displacement but not external influences!