GAS SPRING POWERLINE WITH REINFORCED SPRING BASE

Note:
Initial spring force at 150 bar = 4200 daN

Order No for spare parts kit: 2487.12.04200

Pressure medium: Nitrogen N_2
Max. filling pressure: 150 bar
Min. filling pressure: 25 bar
Working temperature: 0°C to +80°C
Temperature related force increase: ± 0.3%/°C
Max. recommended extensions per minute:
approx. 20 to 100 (at 20°C)
Max. piston speed: 1.6 m/s

2487.12.33.04200.

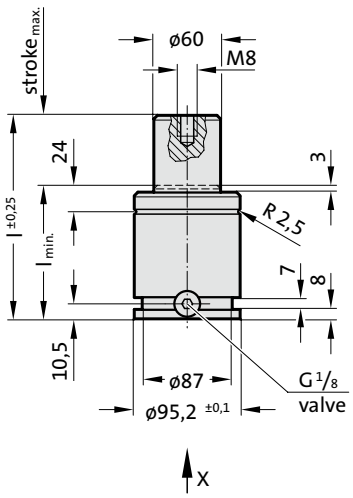

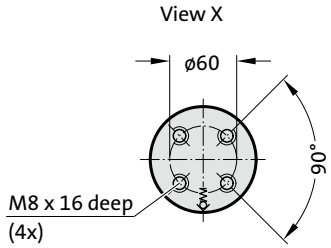

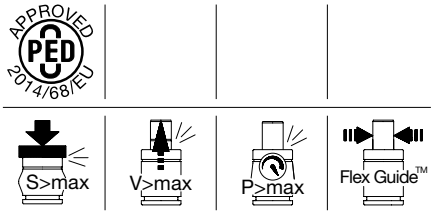

2487.12.33.04200.

Gas spring POWERLINE with reinforced spring base

Order No	Stroke$_{max.}$ (s)	$l_{min.}$	l
2487.12.33.04200.016	16	78	94
2487.12.33.04200.019	19	81	100
2487.12.33.04200.025	25	87	112
2487.12.33.04200.032	32	94	126
2487.12.33.04200.038	38	100	138
2487.12.33.04200.050	50	112	162
2487.12.33.04200.063	63	125	188
2487.12.33.04200.075	75	137	212
2487.12.33.04200.080	80	142	222
2487.12.33.04200.100	100	162	262
2487.12.33.04200.125	125	187	312

Initial spring force
versus charge pressure

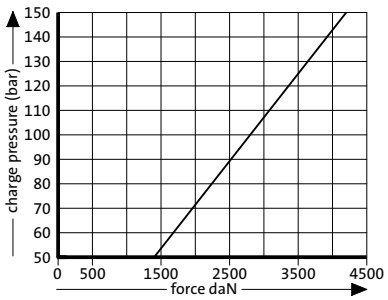

Spring force Diagram displacement versus stroke rise

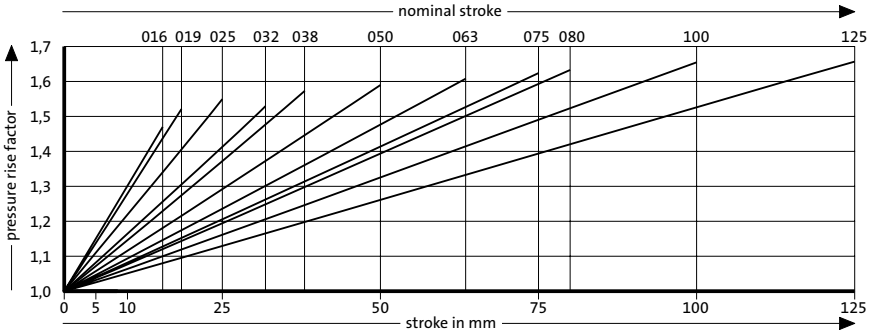

Pressure rise factor accounts for displacement but not external influences!